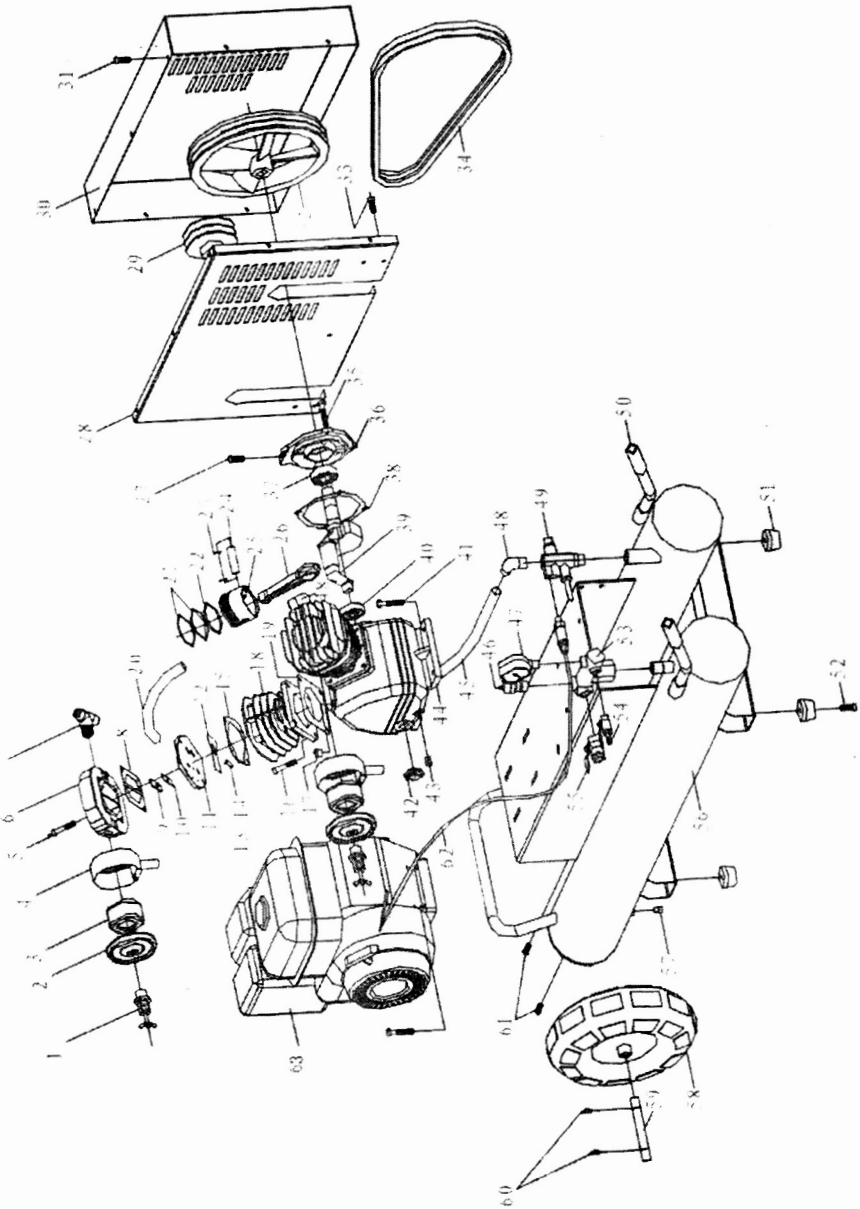5.2 Explosion diagram of complete machine